PATTON®
let's Connect!™

OnSite™ Model 2621 & 2635
WAN Access Router

Quick Start Guide

Part Number: 07M2621-QS, Rev. C
Revised: February 22, 2012

Sales Office: +1 (301) 975-1000
Technical Support: +1 (301) 975-1007
E-mail: support@patton.com
WWW: www.patton.com

WARNING

- **The OnSite 2621/2635 contains no user serviceable parts. The equipment shall be returned to Patton Electronics for repairs, or repaired by qualified service personnel.**
- **An approved external power supply that incorporates a disconnect device shall be used and positioned within easy reach of the operator.**
- **For AC powered units, the power cable used to connect the power supply shall meet all applicable standards for the country in which it is to be installed, and be connected to a wall outlet which has earth ground.**
- **Hazardous network voltages are present in WAN ports regardless of whether power to the unit is ON or OFF. To avoid electric shock, use caution when near WAN ports. When detaching the cables, detach the end away from the 2621/2635 first.**
- **Do not work on the system or connect or disconnect cables during periods of lightning activity.**

1.0 Power up the router

CAUTION

The interconnecting cables shall be acceptable for external use and shall be rated for the proper application with respect to voltage, current, anticipated temperature, flammability, and mechanical serviceability.

Your router comes with one of the following power supply options:

- External AC adaptor with included power cord
- Internal AC power supply
- Internal DC power supply—no power accessories are included

1.1 Models with external AC adaptor

1. Connect female plug of the AC power cord to the AC adaptor provided.
2. Connect the barrel-type connector of the AC adaptor to the barrel-type *Power* jack on the OnSite router.
3. Insert the male plug of the AC power cord into an AC power outlet (100–240 VAC).

1.2 Models with internal AC power supply

1. Insert the female end of the AC power cord into the internal power supply connector.
2. Connect the male end of the power cord into an AC power outlet (100–240 VAC).

1.3 Models with internal DC power supply

1. Strip insulation 1/4-inch from the electrical wires that will connect the DC power source to the OnSite.
2. Connect the ground terminal from the power source to the ground terminal on the OnSite.
3. Connect the negative (-) terminal from the power source with to the negative (-) terminal on the OnSite.
4. Connect the positive (+) terminal from the power source with to the positive (+) terminal on the OnSite.

1.4 Power-up indication

The *Power* LED blinks as the OnSite is powering up. When the *Power* LED stops blinking and remains lit, the OnSite is ready for you to configure.

2.0 Configure the IP address

The OnSite is shipped with a factory-configured IP address assigned to the *Ethernet* LAN port (green outline). The address is *192.168.200.10/24*. In most cases, you must change the address to be on the same subnet as your PC, as described in the procedures below. If you are not sure which IP address to use for your installation, contact your network administrator.

2.1 Connect a PC and log in

1. Using the included combination RS232/Ethernet cable and DB9-RJ45 adapter, connect a PC's serial port to the OnSite's *Console* port (see **figure 1**).

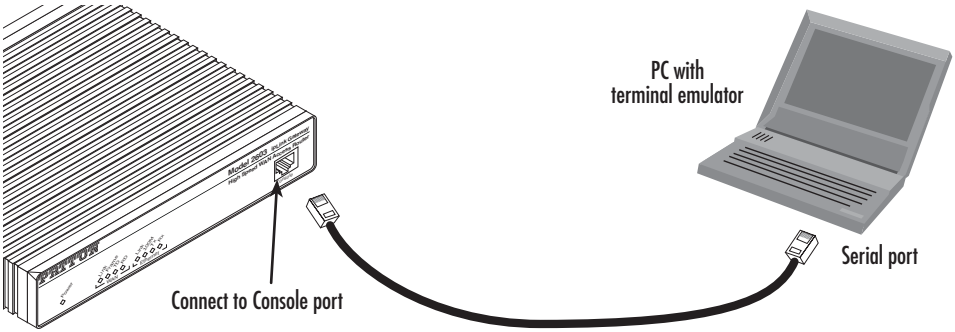

Figure 1. Connecting OnSite to the PC's serial port

2. Start a HyperTerminal session on the PC using the settings:
   9600 bps, 8 data bits, 1 stop bit, no parity, no flow control
3. Log in to the OnSite using the factory-default login and password:

```
Login: superuser
Password: superuser
Login successful
```

2.2 Modify the IP address

1. Display current IP interface settings for the OnSite *Ethernet* LAN port.

```
fi    ip list interfaces <enter>
```

```
IP Interfaces:
ID | Name | IP Address      | DHCP     | Transport
---|------|----------------|----------|--------------
1  | ip1  | 192.168.200.10 | disabled | eth0
-----------------------------------------------------
```

2. Modify the IP address for the LAN port according to your network requirements.

```
fi    ip set interface ip1 ipaddress 10.10.10.5 255.255.255.0
```

Note The above IP address (10.10.10.5/24) is only an example. You must choose an IP address on the same subnet as your PC.

3. Verify the new address is correct and save it in non-volatile memory.

```
fi    ip list interfaces <enter>
fi    system config save <enter>
fi
```

Now you can connect the OnSite to your local IP network and complete the remaining configuration from your PC using a standard web browser.

3.0 Connect to the local IP network

Connect the OnSite's (green) *Ethernet* port to the same Ethernet segment as your PC (see **figure 2**). Press the MDI-X switch until the *Ethernet Link* LED turns on.

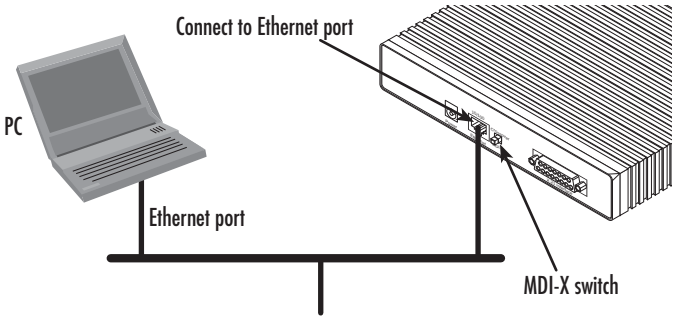

Figure 2. Connecting the OnSite to the local IP network

You can check the network connection with the ping command. For example, you would ping *10.10.10.5* from your PC.

4.0 Log onto the web management interface

You will now access the web management Graphical User Interface (GUI) to configure the OnSite using a standard web browser (such as Internet Explorer or Netscape browser).

1. At your PC, open a web browser and enter the IP address you assigned to the OnSite's Ethernet LAN port in step 2 of section **2.2 "Modify the IP address"** on page 4.
2. Log in to the web management home page using the username *superuser* and the password *superuser*.

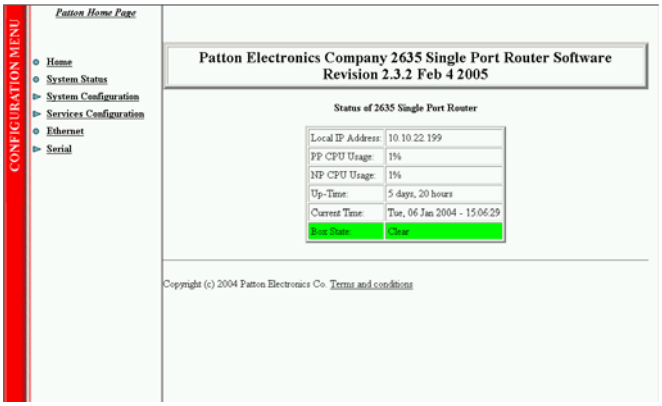

Figure 3. OnSite web management home page

3. Now you can use the OnSite's web management pages to complete your configuration (see section **6.0 "Complete the installation"** on page 7).

5.0 Connect the WAN port

5.1 Model 2621

The X.21 interface can be configured as a DTE (factory default), or as a DCE via internal configuration jumper. When the local third-party equipment is configured as DTE, the Model 2621 X.21 serial port can be configured as DCE, and a regular straight-through cable can then be used.

1. If you will be using the Model 2621 as a DTE, go to step 5. Otherwise, to configure the X.21 port as a DCE, open the OnSite's case by inserting a screwdriver into the slots and twist the screwdriver head slightly. The top half of the case will separate from the lower half of the case (see **figure 4**). Be careful not to insert the screwdriver too far into the case so you do not damage the PC board mounted components.

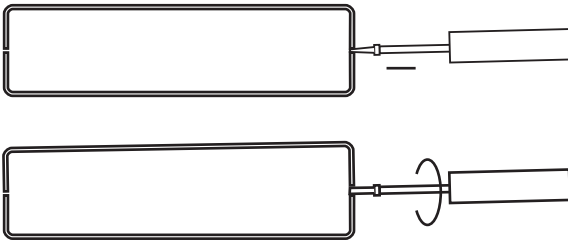

Figure 4. Case being opened with a screwdriver

2. Locate the small daughter board on the Model 2621 board to the right of the DB-15 connector (**figure 5** shows location of DTE/DCE daughter board).

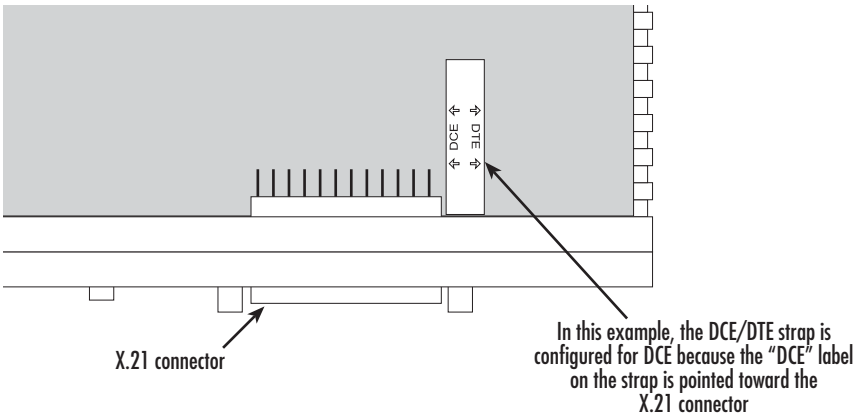

Figure 5. Location of DTE/DCE board

3. The DTE/DCE daughter board is installed at the factory with the DTE label and arrows pointing towards the X.21 connector (DTE configuration). To change to DCE configuration, lift the daughter board from the

connector, turn it around so that the DCE label an arrows point to the X.21 connector, and place it back on the connector. The X.21 port is now configured as a DCE.

Note When the X.21 port is configured as a DTE, the clocking mode for the port must be set for external clock.

4. Re-assemble the case.
5. Plug the X.21 WAN cable's DB-15 male end into the DB-15 connector (labeled *X.21 Interface)* on the OnSite Router.
6. Plug the other end of the cable into the X.21 device.

5.2 Model 2635

1. Plug the V.35 WAN cable's DB-25 end into the OnSite's *Serial Interface* connector.
2. Plug the other end of the cable into the V.35 device.

6.0 Complete the installation

To finish configuring your OnSite, and for detailed information about installing, configuring, operating, and troubleshooting, refer to the *Models 2603, 2621, and 2635 OnSite Series High Speed Routers User Manual* available online at **www.patton.com/manuals/2600SER.pdf.**

A.0 Customer and Technical Support

Toll-Free VoIP support: call **sip:support@patton.com** with a VoIP SIP phone

Online support: www.**patton.com**

E-mail support: **support@patton.com**—answered within 1 business day

Telephone support:

- Standard: +1 (301) 975-1007 (USA), Monday–Friday: 8:00 am to 5:00 pm EST (1300 to 2200 UTC/GMT)
- Alternate: +41 (0)31 985 25 55 (Switzerland), Monday–Friday: 8:00 am to 5:00 pm CET (0900 to 1800 UTC/GMT)

Fax: **+1 (253) 663-5693** (USA) **or +41 (0)31 985 25 26** (Switzerland)

B.0 Compliance Information

B.1 Radio and TV Interference (FCC Part 15)

This equipment generates and uses radio frequency energy, and if not installed and used properly—that is, in strict accordance with the manufacturer's instructions—may cause interference to radio and television reception. This equipment has been tested and found to comply with the limits for a Class A computing device in accordance with the specifications in Subpart B of Part 15 of FCC rules, which are designed to provide reasonable protection from such interference in a commercial installation. However, there is no guarantee that interference will not occur in a particular installation. If the equipment causes interference to radio or television reception, which can be determined by disconnecting the cables, try to correct the interference by one or more of the following measures: moving the computing equipment away from the receiver, re-orienting the receiving antenna, and/or plugging the receiving equipment into a different AC outlet (such that the computing equipment and receiver are on different branches).

B.2 EC Declaration of Conformity

Product Description: OnSite 2621, 2635

We certify that the apparatus identified above conforms to the requirements of Council Directive 1999/5/EC on the approximation of the laws of the member states relating to Radio and Telecommunication Terminal Equipment and the mutual recognition of their conformity.

CE

The safety advises in the documentation accompanying the products shall be obeyed. The conformity to the above directive is indicated by the CE sign on the device.

The signed Declaration of Conformity can be downloaded from **www.patton.com/certifications/**.

B.3 FCC Part 68 (ACTA) Statement

This equipment complies with Part 68 of FCC rules and the requirements adopted by ACTA. On the bottom side of this equipment is a label that contains—among other information—a product identifier in the format US: AAAEQ##TXXXX. If requested, this number must be provided to the telephone company.

The method used to connect this equipment to the premises wiring and telephone network must comply with the applicable FCC Part 68 rules and requirements adopted by the ACTA.

If this equipment causes harm to the telephone network, the telephone company will notify you in advance that temporary discontinuance of service may be required. But if advance notice isn't practical, the telephone company will notify the customer as soon as possible. Also, you will be advised of your right to file a complaint with the FCC if you believe it is necessary.

The telephone company may make changes in its facilities, equipment, operations or procedures that could affect the operation of the equipment. If this happens, the telephone company will provide advance notice in order for you to make necessary modifications to maintain uninterrupted service.

If trouble is experienced with this equipment, for repair or warranty information, please contact our company. If the equipment is causing harm to the telephone network, the telephone company may request that you disconnect the equipment until the problem is resolved.

Connection to party line service is subject to state tariffs. Contact the state public utility commission, public service commission or corporation commission for information.

B.4 Industry Canada Notice

This equipment meets the applicable Industry Canada Terminal Equipment Technical Specifications. This is confirmed by the registration number. The abbreviation, IC, before the registration number signifies that registration was performed based on a Declaration of Conformity indicating that Industry Canada technical specifications were met. It does not imply that Industry Canada approved the equipment.

This Declaration of Conformity means that the equipment meets certain telecommunications network protective, operational and safety requirements. The Department does not guarantee the equipment will operate to the user's satisfaction. Before installing this equipment, users should ensure that it is permissible to be connected to the facilities of the local telecommunications company. The equipment must also be installed using an acceptable method of connection. In some cases, the company's inside wiring associated with a single line individual service may be extended by means of a certified connector assembly (telephone extension cord). The customer should be aware that compliance with the above condition may not prevent degradation of service in some situations. Repairs to some certified equipment should be made by an authorized maintenance facility designated by the supplier. Any repairs or alterations made by the user to this equipment, or equipment malfunctions, may give the telecommunications company cause to request the user to disconnect the equipment. Users should ensure for their own protection that the ground connections of the power utility, telephone lines and internal metallic water pipe system, are connected together. This protection may be particularly important in rural areas.

Notes

Notes

Copyright statement

Copyright © 2012, Patton Electronics Company. All rights reserved.

The information in this document is subject to change without notice. Patton Electronics assumes no liability for errors that may appear in this document.

Trademarks statement

The term *OnSite* is a trademark of Patton Electronics Company. All other trademarks presented in this document are the property of their respective owners.

Warranty, Trademark, & Compliance Information

For warranty, trademark and compliance information, refer to the *Models 2603, 2621, and 2635 OnSite Series High Speed Routers User Manual* available online at **www.patton.com/manuals/2600SER.pdf**.

In accordance with the requirements of council directive 2002/96/EC on Waste of Electrical and Electronic Equipment (WEEE), ensure that at end-of-life you separate this product from other waste and scrap and deliver to the WEEE collection system in your country for recycling.